KOHLER

JULY Tall Lavatory Faucet

JULY
K-5241T-4

Product Specification:

Model	Spout		Handle	Includes	Finish
	Reach	Height			
K-5241T-4	125mm	178mm	Lever	Spout, handle, valve, aerator, drain kit, supplies, connection assy.	CP AF BN

Product Dimension:

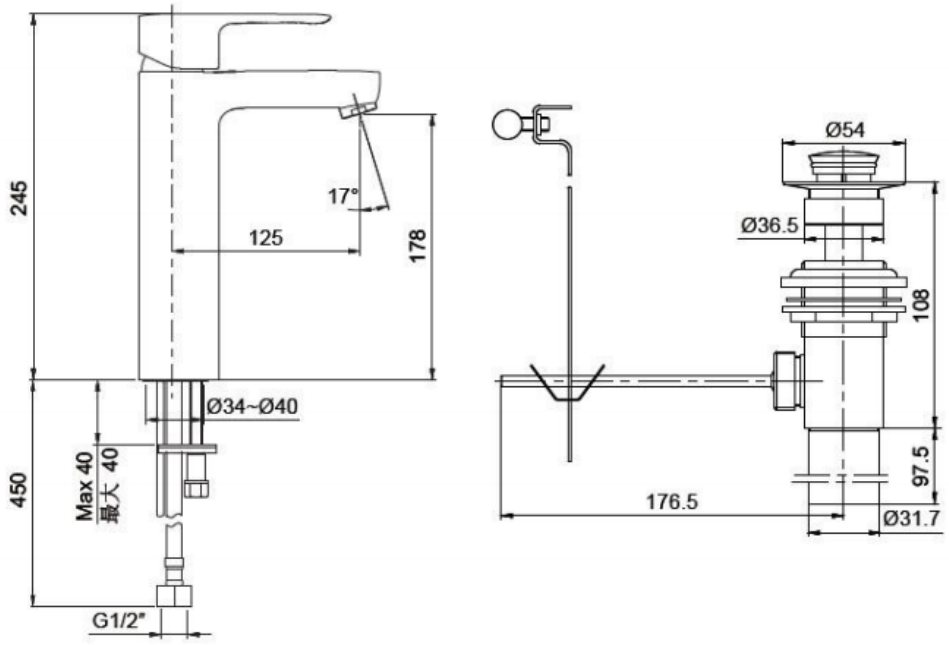

K-5241T-4

Please note that the above information are subject to change without notice.